INSTALLATION GUIDE
PP – 24p – 0.5U - ALUMINIUM

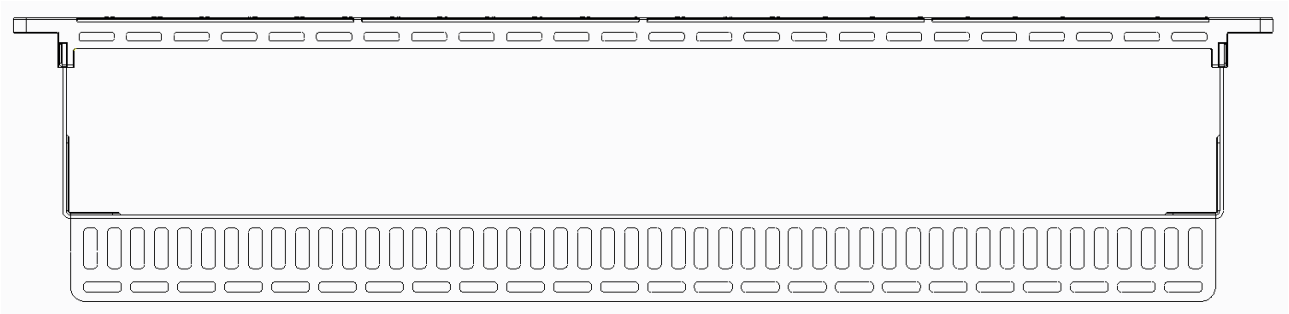

1.

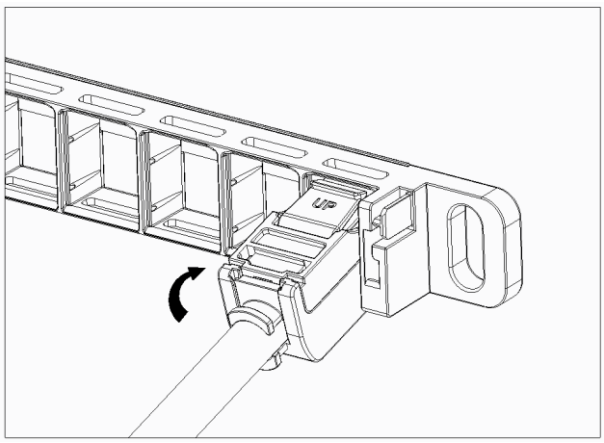

Mount all KSM – keystone modules into the panel as shown

2.

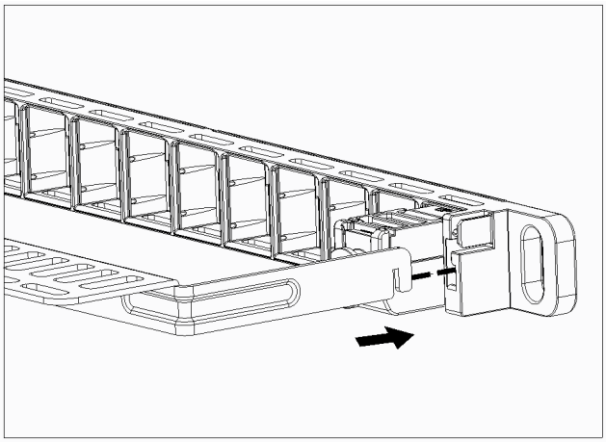

Mount the cable management to the front plate as shown

3.

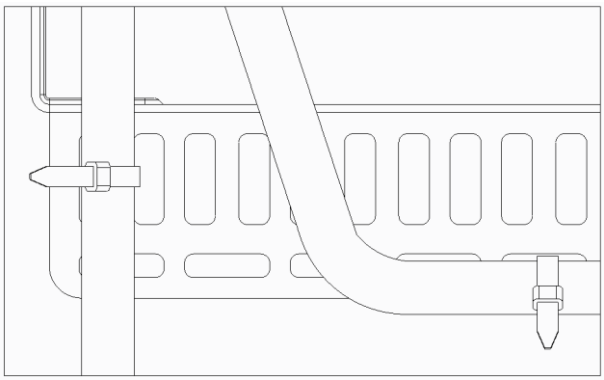

The cable can be fixed in two ways with cable ties.

4.

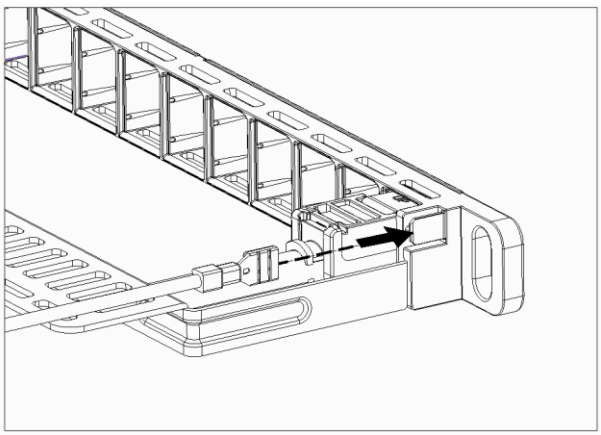

Connecting the grounding wire to the front plate